REPEATABILITY 0.001mm

ALLOWABLE OPERATING SPEED 5m/min RECOMMENDED SPEED 40~100mm/min

CONTACT RATING DC+24V 10mA (RECOMMENDED VALUE)
(Max. 20mA) NON-INDUCTIVE LOAD

DEGREE OF PROTECTION JIS C0920 IEC IP67

COMPOSITION
- SENSOR HEAD H4A-18-21H
- LEVEL CONVERSION UNIT BA-4A-01

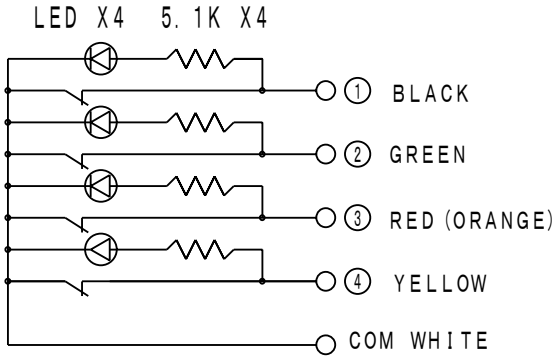

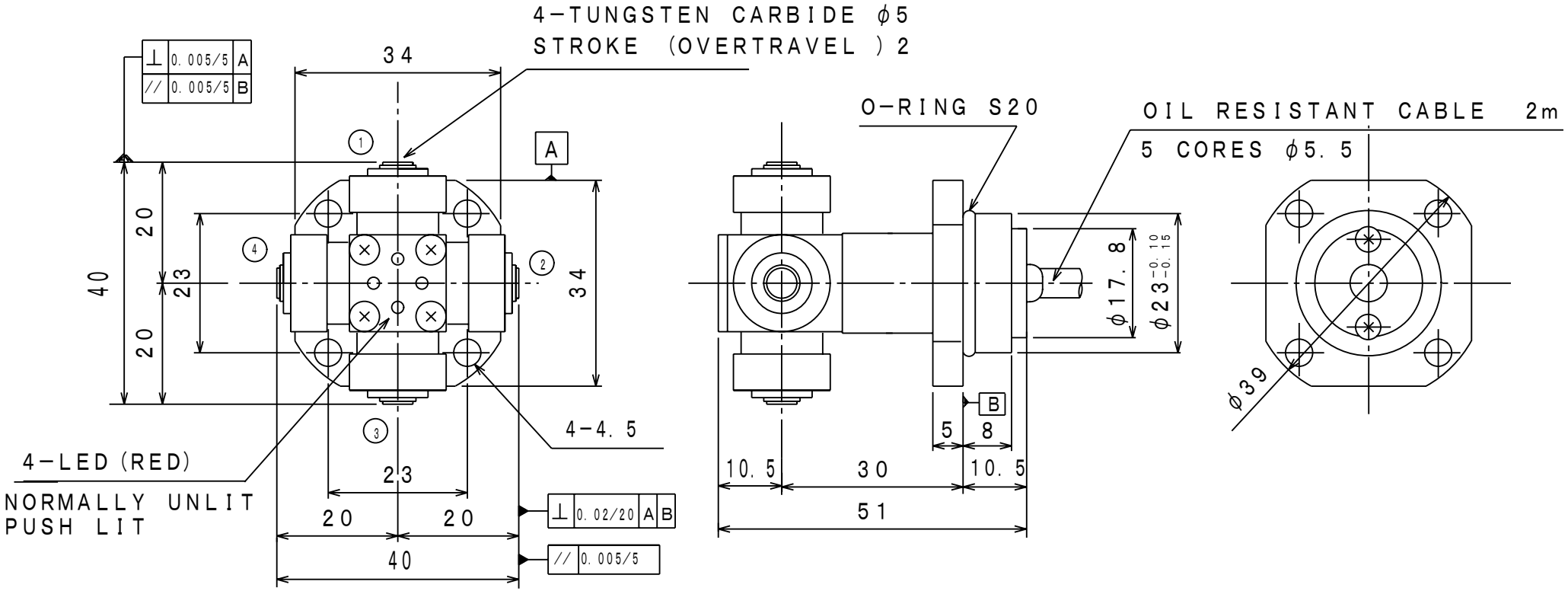

NAME	TOOL SETTING PROBE
DRAWING NUMBER	H4A-18-21
METROL CO., LTD.	

1/1

MS-05E-01X4

4A1821