OPERATION MODE : NORMALLY CLOSED
REPEATABILITY OF SKIP SIGNAL : 0.001mm
(RECOMMENDED OPERATING SPEED : 50~200mm/min)
RATING : DC24V 20mA(Max)
(RECOMMENDED 10mA) NON-INDUCTIVE LOAD
DEGREES OF PROTECTION : IEC IP67

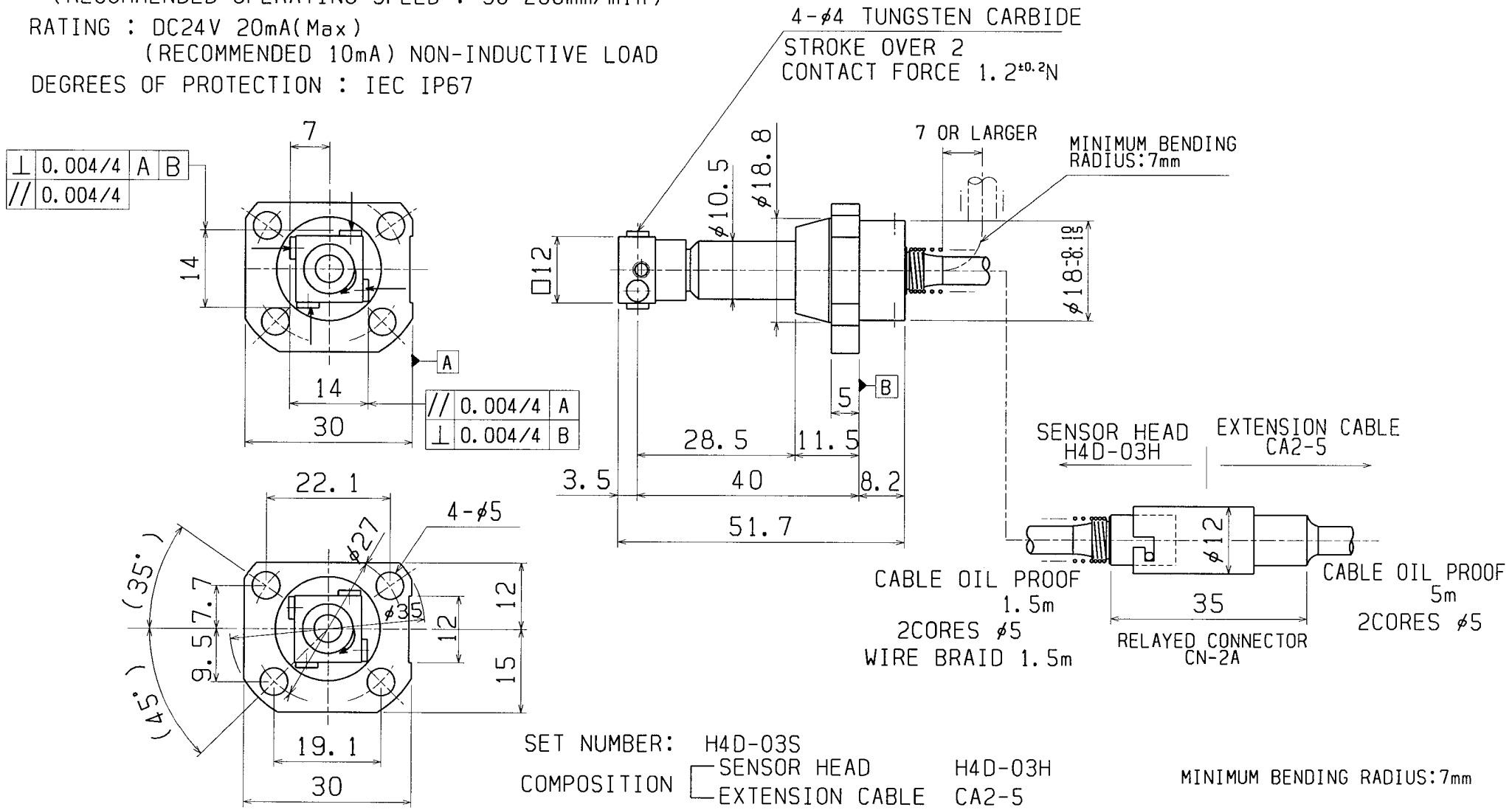

SET NUMBER: H4D-03S

COMPOSITION
- SENSOR HEAD H4D-03H
- EXTENSION CABLE CA2-5

MINIMUM BENDING RADIUS:7mm

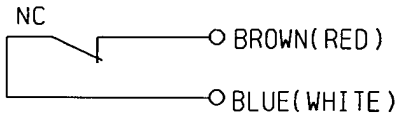

APR	CHK	DRA
		01.11.15 HIJIKATA

	NAME	TOOL SETTING PROBE
	DRAWING NUMBER	H4D-03S
1/1	METROL LTD.	METROL

CONTACT FORCE HAS CHANGED ON 27.APRIL.2004. 1.8→1.2±0.2N
CABLE COLORS HAS CHANGED ON 27.APRIL.2004. RED→BROWN, WHITE→BLUE

¥H4D¥ENG¥4D03E

REVISION 2007.08.17