① SKIP SIGNAL
OPERATION MODE : NORMALLY CLOSED
REPEATABILITY OF SKIP SIGNAL : 0.001mm
RECOMMENDED OPERATING SPEED : 50~200mm/min

② OVER TRAVEL SIGNAL
MICRO SWITCH
CONTACT RATING:DC24V 100mA
(NON-INDUCTIVE LOAD)
OPERATION MODE : NORMALLY OPEN
OPERATION MODE : NORMALLY CLOSED

DEGREES OF PROTECTION : IEC IP67

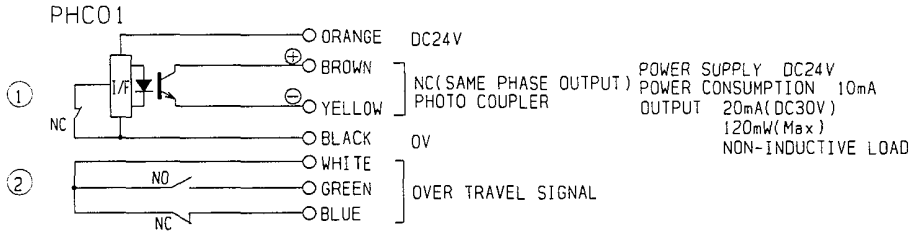

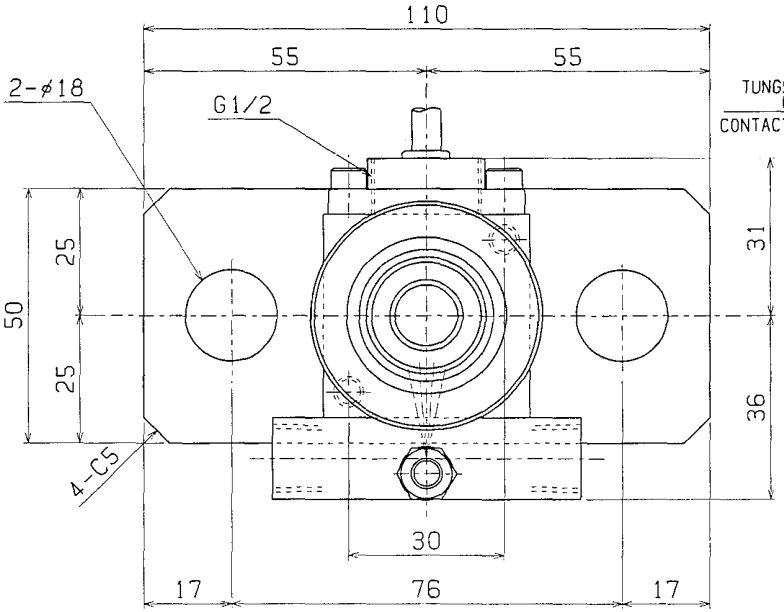

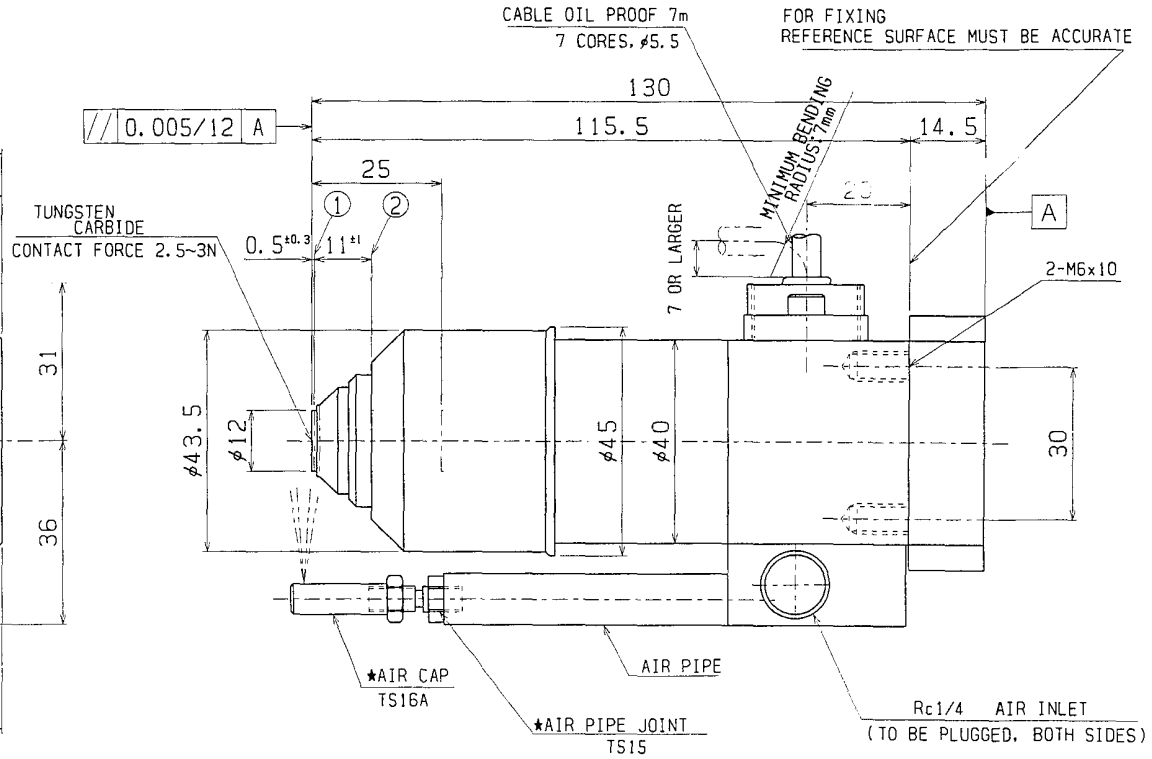

★ACCESSORY AIR PIPE JOINT TS15 1PC
AIR CAP TS16A 1PC

A3				NAME	TOOL SETTER
				DRAWING NUMBER	T24D-23
APR	CHK	DRA	REV05. 12.27 MIURA	1/1	METROL LTD. METROL

¥T24D¥ENG¥24D23E.FXD REVISION 2005.12.27 REVISION 2007.01.11